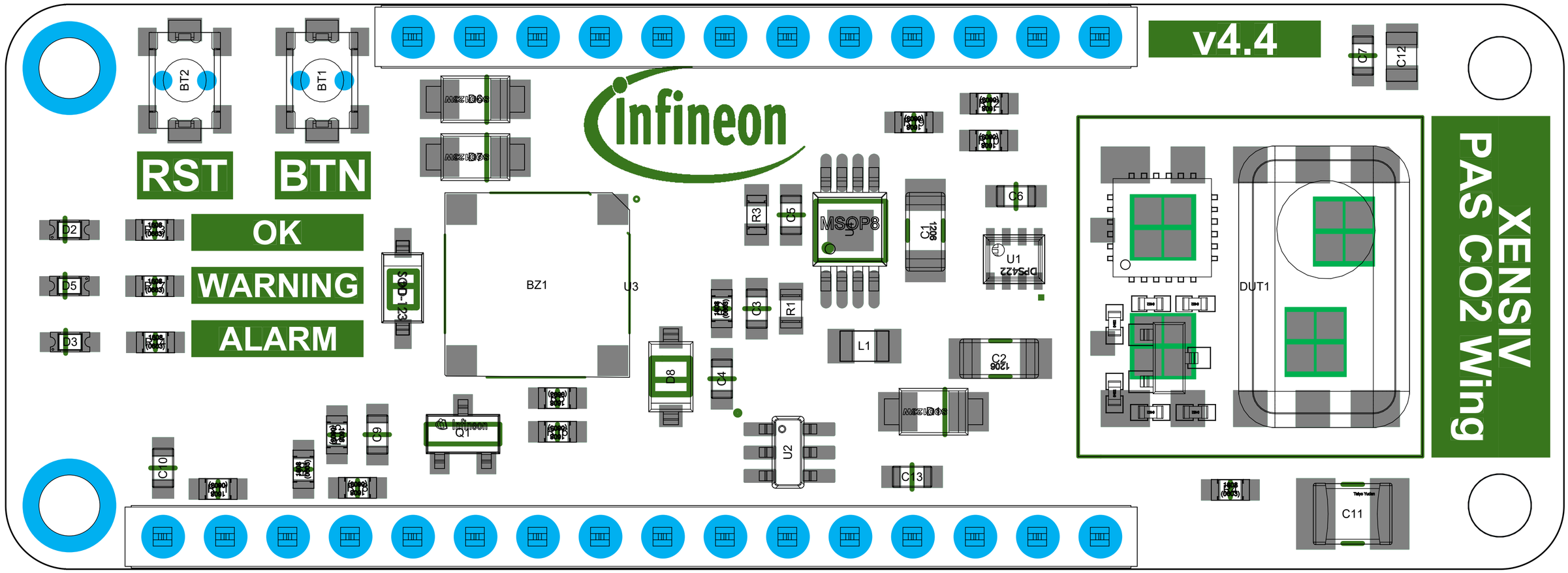

Check included Datasheet for soldering PAS CO2 Sensor (DUT1)

THE INFORMATION CONTAINED IN THIS DRAWING IS THE SOLE PROPERTY OF Infineon Technologies AG. ANY REPRODUCTION IN PART OR AS A WHOLE WITHOUT THE WRITTEN PROPRIETARY AND CONFIDENTIAL

NEXT ASSY	USED ON	
APPLICATION		

UNLESS OTHERWISE SPECIFIED:
DIMENSIONS ARE IN INCHES
TOLERANCES:
FRACTIONAL±
ANGULAR: MACH± BEND ±
TWO PLACE DECIMAL ±
THREE PLACE DECIMAL ±
INTERPRET GEOMETRIC TOLERANCING PER:
MATERIAL
FINISH
DO NOT SCALE DRAWING

	NAME	DATE
DRAWN	AEH	12.08.2024
CHECKED	AEH	
ENG APPR.		
MFG APPR.		
Q.A.		

COMMENTS:

Infineon Technologies AG

TITLE
EVAL_PASCO2_12V_Wing_V4.4

SIZE	DWG. NO.	
SCALE: 1:1	WEIGHT:	SHEET 1 OF 2

Optical inspection

Prior to packing an optical inspection shall be performed to screen out parts with a damaged particle protector (white sticker on the lid). Please sort out any parts that show any deviation on the particle protector from the typical visuals (typical left image below, typical fails parts show on the right – three examples)

IMPORTANT: Pictures are from a different board but with the same part (DUT1).

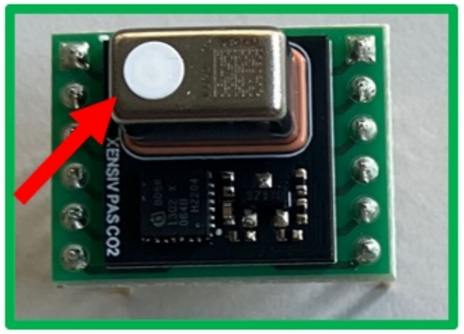

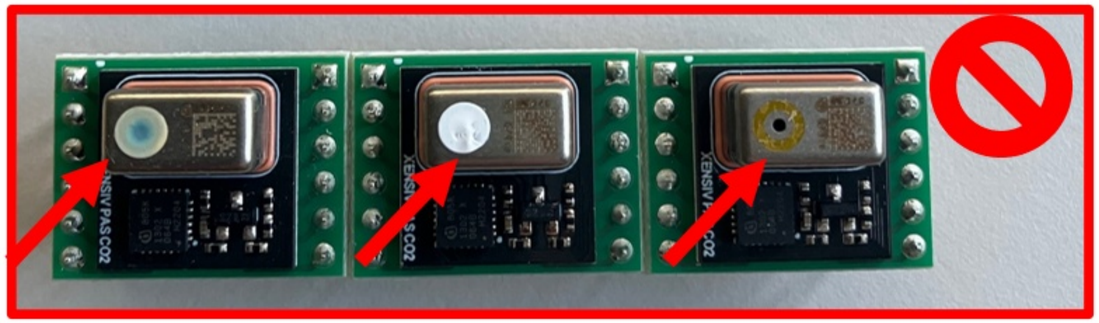

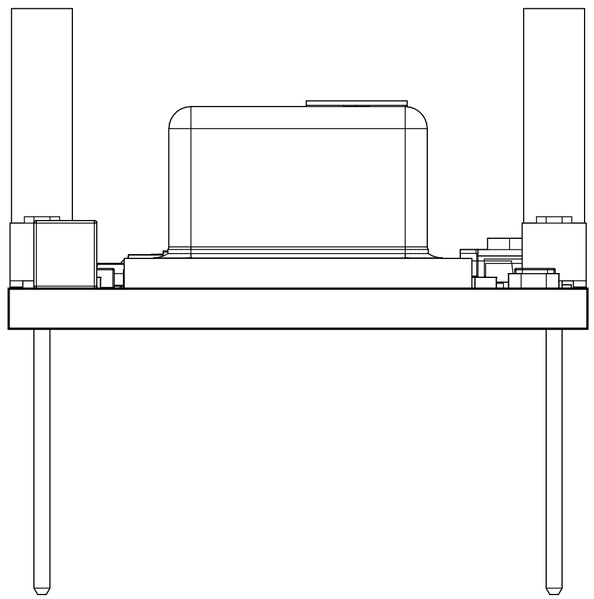

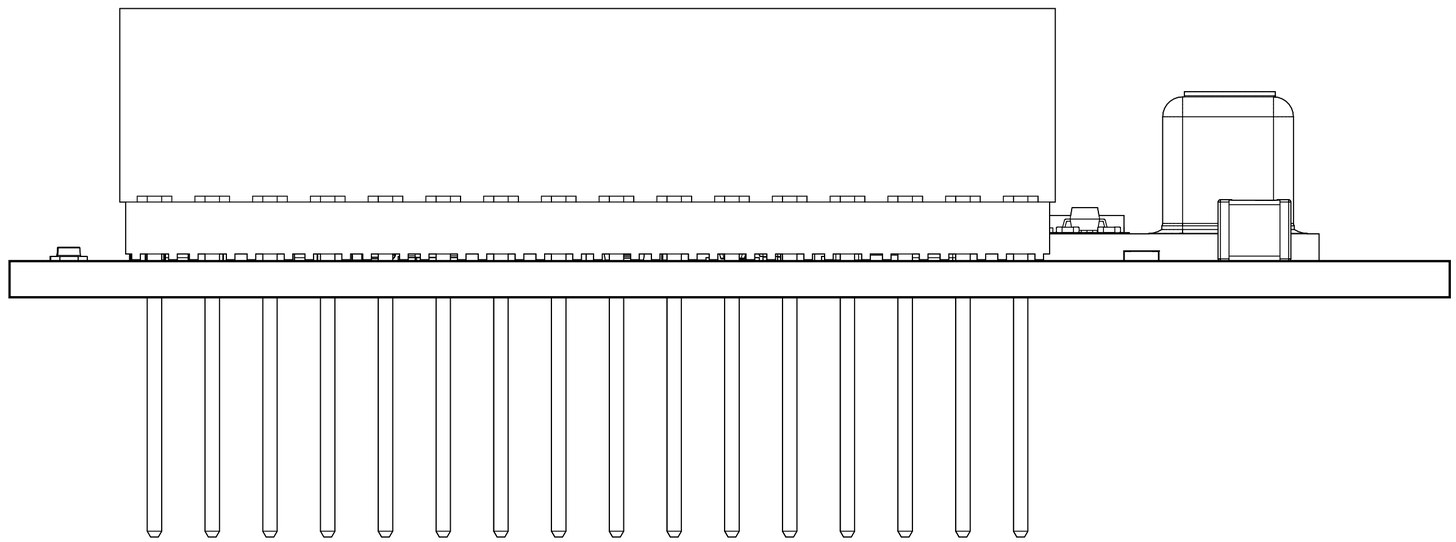

THE INFORMATION CONTAINED IN THIS DRAWING IS THE SOLE PROPERTY OF Infineon Technologies AG. ANY REPRODUCTION IN PART OR AS A WHOLE WITHOUT THE WRITTEN PROPRIETARY AND CONFIDENTIAL

NEXT ASSY	USED ON
APPLICATION	

UNLESS OTHERWISE SPECIFIED:
DIMENSIONS ARE IN INCHES
TOLERANCES:
FRACTIONAL±
ANGULAR: MACH± BEND ±
TWO PLACE DECIMAL ±
THREE PLACE DECIMAL ±
INTERPRET GEOMETRIC TOLERANCING PER:
MATERIAL
FINISH
DO NOT SCALE DRAWING

	NAME	DATE
DRAWN	AEH	12.08.2024
CHECKED	AEH	
ENG APPR.		
MFG APPR.		
Q.A.		

COMMENTS:

Infineon Technologies AG

TITLE

EVAL_PASCO2_12V_Wing_V4.4

SIZE	DWG. NO.	
SCALE: 1:1	WEIGHT:	SHEET 2 OF 2